Candidate Marks Report

Series : 6 2018

This candidate's script has been assessed using On-Screen Marking. The marks are therefore not shown on the script itself, but are summarised in the table below.

Centre No :		Assessment Code :	H446
Candidate No :		Component Code :	01
Candidate Name :			

Total Marks :

In the table below ‘Total Mark’ records the mark scored by this candidate.
‘Max Mark’ records the Maximum Mark available for the question.

Answer **all** the questions.

1 A digital coffee making machine has a CPU that uses the Little Man Computer Instruction Set.

(a) Little Man Computer operates on a computer system based on the Von Neumann Architecture.

(i) State **two** features of the Von Neumann architecture.

1 Instructions and data are stored in the same place.

2 There are registers inside the CPU

[2]

(ii) Describe **one** feature, **not** part of the standard Von Neumann Architecture, which contemporary CPUs may have in order to improve performance.

A chache. This is low capacity, very fast storage for frequently used data / instructions

[2]

(b) Part of the coffee making machine's code asks the user to press a button to select strength. The code outputs 1 which will switch on a green light to indicate a valid selection or outputs 0 to indicate an invalid selection.

The code is shown below:

```
                INP
                STA     entry
                LDA     max
                SUB     entry
                BRP     accept
                LDA     redLight
                BRA     printAndEnd
accept          LDA     greenLight
printAndEnd     OUT
                HLT
greenLight      DAT     1
redLight        DAT     0
max             DAT     5
entry           DAT
```

Fig. 1

© OCR 2018

(i) Tick the appropriate boxes below to indicate which inputs will result in a green light (i.e. code outputs 1) and which with a red light.

Input	Green Light	Red Light
1	✓	
2	✓	
3	✓	
4	✓	
5	✓	
6		✓
7		✓
8		✓
9		✓

[2]

(ii) Explain which registers and buses are used, and the values they store/carry, when the line `LDA redLight` is executed (after it has been fetched and decoded). You should assume the address `redLight` refers to memory location 11.

When redlight is executed, the ~~instructions~~ address 11 is ~~e~~ sent along the address bus. The data/instruction stored at address 11 ~~is~~ in memory is then sent along the data bus to the MDR. 11 is stored in the MAR. The instruction is then sent to the accumulator which ~~more~~ manages I/O operations and is a buffer. There is direct addressing.

[6]

© OCR 2018

(iii) Write code in a high-level language or pseudocode that has the same functionality as the code in Fig. 1.

```
function strengthCheck {
    int max = 5;
    Option = input;
    if (max - input < 0) {
        run greenlight;}
    else {run redlight;}
}
```

[3]

(iv)* Discuss the differences between assembly code and high-level languages. You should refer to:

- ✓ the advantages and disadvantages of writing programs in assembly code rather than a high-level language + faster (no compilation) - hard to read
- ✓ when each approach might be used - simple / drivers / OS
- why the coffee machine was programmed in assembly code.

add

An advantage of writing in assembly is that it does not need to be converted to other types of code before it can be run by the processor. This means it will run faster. A disadvantage is that assembly code is hard to read for humans, as it is a low level language. High level code like Java is much easier to read. Assembly might be used for simple tasks, on machines that do not run traditional operating systems. It may also be used when writing code that is hardware specific, such as in the operating system or device drivers. The coffee machine was written in machine code probably because ~~the~~ it is an embedded system that ~~is~~ has a relatively simple job. Using a high ~~let~~ level language would mean having complex compilers installed which the machine doesn't need.

[9]

© OCR 2018

2 A software company decides to build an operating system for OCR smart watches.

(a) Memory management is one of the functions of an operating system.

(i) List **three** functions, other than memory management, of an operating system.

1 Managing the hardware

2 file management & navigation

3 Security such as user accounts and ~~pass~~ passwords. [3]

Part of a computer's memory is represented below (Fig. 2). The operating system divides the memory into equally sized chunks.

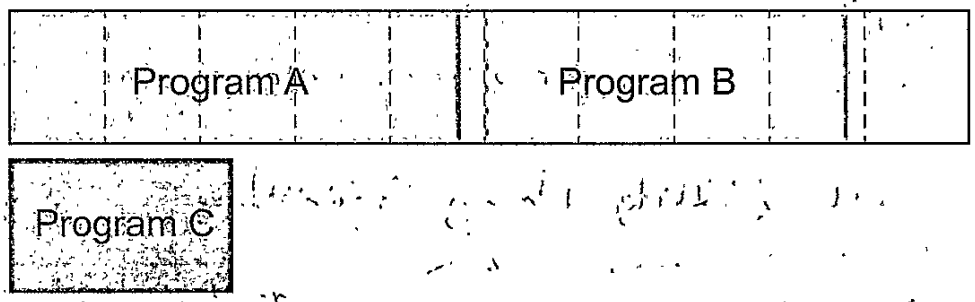

Fig. 2

(ii) State the name of the type of memory management used in Fig. 2.

Paging [1]

(iii) The operating system needs to load program C into memory but there is not enough space. Describe how the operating system would use virtual memory to load program C.

When the RAM fills up, pages that are not being used are loaded into a section of secondary storage ~~called~~ predefined as virtual memory. When they are needed again, they are loaded back into memory. [3]

© OCR 2018

(b) The company sets up a website to promote the watch. Part of the website is shown below. The sentence 'Download The Factsheet' is a hyperlink to the file factsheet.pdf which is stored in the same folder as the HTML file for the webpage.

Features

The new OCR Smart Watch:

1. Uses the CB2 RISC processor for long battery life
2. Stores up to 20hrs of music
3. Tracks fitness

Download The Factsheet

(i) Write the HTML to produce the extract from the webpage above. You can assume it will be placed within the <body> tags of a pre-existing page. You do **not** need to specify the font.

```
<h1> features </h1>
<p1> The new OCR Smart Watch: </p1>,
<li>
    <li> Uses the CB2 RISC Processor for battery
    life </li>
    <li> Stores up to 20hrs of music </li>
    <li> Tracks fitness </li>
</li>
<a href="factsheet.pdf"> "Please Download the
factsheet </a>
```

[5]

© OCR 2018

(ii) Explain what happens when a search engine indexes the page. You do **not** need to discuss ranking.

As new pages are created, they are given an index. This is a unique identifier for that web page, that distinguishes it from other pages.

[3]

(iii) Explain why using a RISC processor rather than a CISC processor is likely to result in increased battery life.

Because a RISC processor has less complex instructions, each instruction only takes one clock cycle. This means it runs cooler as it uses less power. This means it is more effecent.

[3]

© OCR 2018

3 An airport holds details of flights in a database using the table `Flight`. An extract of the table is shown below.

FlightID	FlightNumber	DestinationCode	DestinationName	DepartureDate	DepartureTime
1355	OC0089	JFK	John F. Kennedy	03/07/18	09:50
1453	CS1573	LHR	Heathrow	03/07/18	10:30
1921	OC7750	JFK	John F. Kennedy	04/07/18	08:30
1331	AM0045	YHZ	Halifax	04/07/18	14:25
1592	HB0326	RTM	Rotterdam	04/07/18	19:10
1659	CS0123	LHR	Heathrow	04/07/18	07:20

(a) Describe what the SQL statement below does.

```
SELECT FlightNumber FROM Flight WHERE DestinationCode='JFK'
```

Selects the flight numbers from the table 'flight' of all flights who's destination is the John F Kennedy airport

..... **[2]**

The airport cancels all its flights to Heathrow on 4th July 2018.

(b) The SQL statement below shows all the data for flights going to Halifax. Rewrite it so it instead removes all flights to Heathrow on 4th July 2018.

```
SELECT * FROM Flight WHERE DestinationName='Halifax'
```

DELETE * FROM flight WHERE DestinationCode='LHR' AND DepartureDate = '04/07/18'

..... **[3]**

© OCR 2018

(c) Tables often have primary and secondary keys.

(i) State why `DestinationCode` would **not** be a suitable primary key for the `Flight` table.

Because multiple flights will go to the same destination so it is not a unique identifier. [1]

(ii) State why `DestinationCode` would be a suitable secondary key for the `Flight` table.

Because this would be a useful search tool if querying the database. [1]

(d) The airline wishes to ensure the database is normalised.

(i) Describe why the database can be considered to be in First Normal Form.

Because each flight does not have repeated data and has a unique primary key. [2]

(ii) Describe why the database can be considered to be in Second Normal Form.

Each record also has a flight number which can identify that record from the other records. [2]

(iii) Describe why the database can **not** be considered to be in Third Normal form.

~~Because not all values such as destination names are indexed from their own table's foreign keys such as destination name. Destin~~ Destination name and destination code are repeated data. They could be put into a new table with a destination ID and that could be used. [2]

© OCR 2018

(e) The airport wishes to allow airlines to be able to access the data it has on flights via the internet.

Describe **one** format or method the airport could use to provide the data to the airlines so they can use it in their own applications.

They could upload the database ~~to a~~ ~~and give~~ to a server and give the airlines access. They could query the database with SQL in their applications. [2]

© OCR 2018

4 The internet can be considered an example of a WAN.

(a) Describe what is meant by the term 'WAN'.

a Wide Area Network is a group of connected computers that cover a wide geographical area. [2]

(b) The internet uses a set of protocols referred to as the TCP/IP stack. The TCP/IP stack consists of four different layers, each with its own set of protocols.

(i) Explain why protocols are important on a network.

All devices must follow the same 'rules' or protocols so they can communicate with eachother even if they have a different operating system or have a different type (language) of code. [2]

(ii) State the name of the **four** layers of the TCP/IP stack.

1 Aplication

2 Transport

3 Network

4 link

[4]

© OCR 2018

5 A software company is producing software that allows users with severe mobility issues to input data into a computer.

The software flashes up letters on the screen one at a time. The user sends a signal to the computer when the letter they want appears on the screen.

(a) State the name of an input device and describe how it could be used by a user with very limited mobility in their hands and arms to send a signal to the computer.

Device name: Eye tracker.

How it would be used: Mouse can be moved by moving their eyes around the screen and clicking can be picked up by a sensor when the user blinks. [2]

© OCR 2018

(b) Rather than displaying the whole alphabet, once the first letter has been entered, the program only shows letters that could be possible according to words in its dictionary. All possible words are stored in a tree data structure.

The program is tested on a sample dictionary of four words, represented as a tree in Fig. 3:

```
BARON
BATHS
BELOW
BELTS
```

(i) Annotate Fig. 3 to show how the word BELTS would be removed from the tree. **[2]**

(ii) Annotate Fig. 3 to show how the words BEACH and BONE would be added to the tree. **[2]**

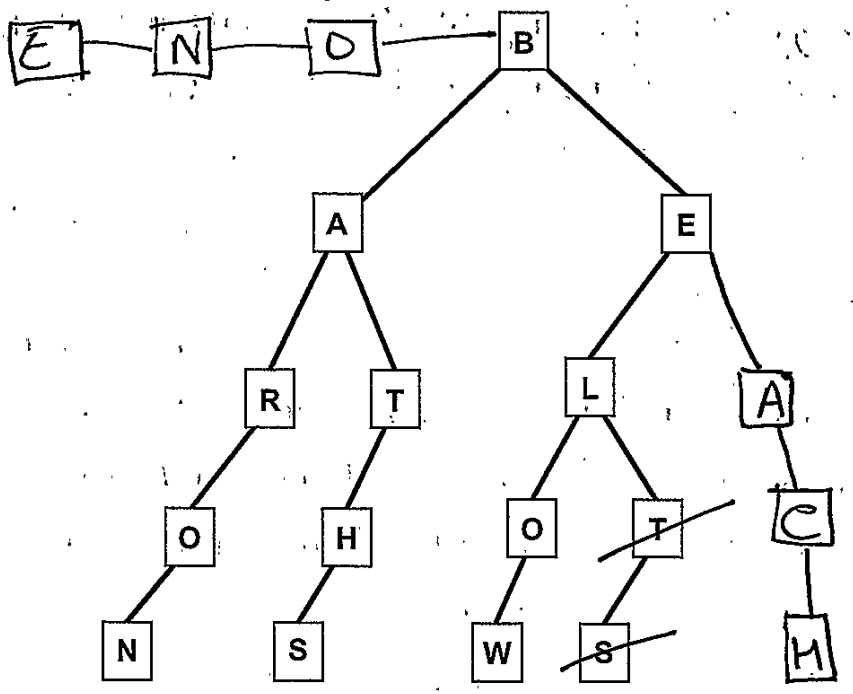

Fig. 3

(c) The developer decides she wants to make the software program open source.

Explain the benefits to the users of the software being open source.

more -

Source code is freely available and can be edited to suit the user. And it is free.

.....

.....

..... **[2]**

© OCR 2018

- Privacy (GDPR) 2018 - facebook
- Hackers - (computer misuse)
- self driving cars

6* *"Technology is changing too quickly for the law to keep up."*

Discuss to what extent you agree with the statement above. In your discussion you should explain which laws regulate the use of technology and how advancements in technology have made the laws difficult to enforce/implement.

I do agree with this statement to some extent, as there are certain laws fields that have not caught up with technology, but mostly they have.

Firstly is security and privacy. When inputting their data online, users want to feel confident that their data is only being used for the purpose advertised when they entered it. The ~~computer~~ general data protection regulation of 2018 ensures this. It outlines how user information is stored, what it is used for, and how long it is stored for. If a company does not adhere to these laws, they can be punished.

Secondly, the computer misuse act outlines that computers cannot be used illegaly for things like theft, hacking, and privacy invasion. This is a broad law which covers any malevolant use of a computer that is newly developed, meaning meaning it stays up to date with new technology. It can however be hard to enforce as hackers can hide their identity using IP scramblers and proxies.

An example where the laws haven't kept up is with innovation of automated technology such as cars and spacecraft. As these technologies have been developed so fast, health and safety regulations have not kept up, leading to speculation and criticism of companies when it goes wrong such as when self-driving cars crash.

In conclusion, the statement is ~~correct~~ wrong for appt new applications of traditional computers, but right for new technologys. [12]

© OCR 2018

7 A taxi firm is investigating replacing its drivers with self-driving cars.

(a) Explain why the self-driving system will use a real-time operating system.

The ~~cont~~ software will need to act instantly to input such as when a traffic light turns red, otherwise there would be a risk to the driver of a crash. [3]

© OCR 2018

(b) The code for the self-driving system has been written using an object-oriented programming language.

It recognises obstacles in the road and then classifies them.
The class for `Obstacle` is shown below.

```
public class Obstacle
     private moving //Boolean value
     private distance //Real number given in metres
     private direction //Integer given as between 1 and 360 degrees

     public procedure new(givenMoving, givenDistance, givenDirection)
        moving=givenMoving
        distance=givenDistance
        direction=givenDirection
     endprocedure

     public procedure updateDistance(givenDistance)
           distance=givenDistance
     endprocedure

endclass
```

(i) Write a line of code to create an object called `bollard` of type `Obstacle` which is not moving and is 7.8 metres away in a direction of 8 degrees.

Obstical bollard = new Obstical (0, 7.8, 8);

..... **[2]**

(ii) Describe an example of encapsulation in the class definition code above.

In the updateDistance procedure, encapsulation is used when updating the distance as the distance is being referenced twice.

..... **[2]**

(iii) Describe the advantages of using encapsulation.

Code is more efficient as there it eliminates the need for repeated code.

..... **[2]**

© OCR 2018

(c) The self-driving program recognises people as a special type of obstacle and the class `Person` should inherit the methods and attributes of `Obstacle`. People are treated like other obstacles except:

- when the `updateDistance` method is called, if the person is more than 2 metres away but is 5 metres (or less) away, the method `Controls.beepHorn()` is called.
- when the person is 2 metres away (or closer), the method `Controls.applyBrakes()` is called as well as `Controls.beepHorn()`.

Complete the class `Person`.

```
class Person = new Obstickle= new obsticle
    public procedure updateDistance(givenDistance)
        distance = givenDistance
        if(distance >2 && distance <=5){
            Controlls.beepHorn()}
        if (distance <=2){
            Controlls.applyBrakes()
            Controlls.beepHorn()
            }
        distance=givenDistance
    endprocedure
endclass
```

[5]

(d) Give **one** advantage and **one** disadvantage to the customers of the taxi using self-driving cars rather than drivers.

Advantage

They do not have to pay driver wages.

Disadvantage

Larger company liability public annoyance in the event of crash

[2]

© OCR 2018

8 A student writes a program to apply a symmetric encryption algorithm to work on messages of up to 25 ASCII characters.

(a) Describe what is meant by the term 'ASCII'.

A table of characters where each character is assigned a binary value between 0 and 127.

[2]

The encryption algorithm works in the following way.
A message of up to 25 characters (spaces and punctuation are not included) is placed in a 5×5 array. Any leftover spaces are filled with random letters. The message I LOVE COMPUTER SCIENCE becomes:

I	L	O	V	E
C	O	M	P	U
T	E	R	S	C
I	E	N	C	E
T	O	W	R	M

The key is a sequence of ten numbers.
In this example we will use 1 2 3 4 5 1 2 3 4 5. The first 5 numbers state how many spaces the rows 0 to 4 must be rotated right.

A key with the first 5 digits 1 2 3 4 5 would result in

E	I	L	O	V
P	U	C	O	M
R	S	C	T	E
E	N	C	E	I
T	O	W	R	M

The next 5 digits state how many spaces down the columns 0 to 4 should be rotated.

Applying the last 5 digits 1 2 3 4 5 to the grid above would give

T	N	C	O	V
E	O	C	T	M
P	I	W	E	E
R	U	L	R	I
E	S	C	O	M

© OCR 2018

98/140

49/70

Part of the pseudocode for the algorithm is written below.

```
global array grid[5,5]
addMessage()
// letters and random letters have been entered
// into the 2D array, grid

for i = 0 to 4
     x = getNextDigitInKey()
     shiftRow(i,x)
next i

for i = 0 to 4
     x = getNextDigitInKey()
     shiftColumn(i,x)
next i

//Now reassemble array back into string.
```

(b) Show the result of running the algorithm on the grid and key below. **[2]**

KEY: 3 3 3 3 3 1 1 1 1 1

T	O	P	S	E
C	R	E	T	M
E	S	S	A	G
E	Y	R	P	L
U	O	G	G	Q

Grid after only the rows are shifted:

P	S	E	T	O
E	T	M	C	R
S	A	G	E	S
R	P	L	E	Y
G	G	Q	U	O

Grid after columns have also been shifted:

S	A			
R	P			
G	G			
P	S	E		
E	T			

G	G	Q	U	O
P	S	E	T	O
E	T	M	C	R
S	A	G	E	S
R	P	L	E	Y

© OCR 2018

(c) Write the procedure `shiftRow`.

```
procedure shiftRow {
for each
    if i = 4 {
        i=0;
    for i=0 to i=4
        grid[i] = grid[i-1]
```

See continuation

```
}
```

[4]

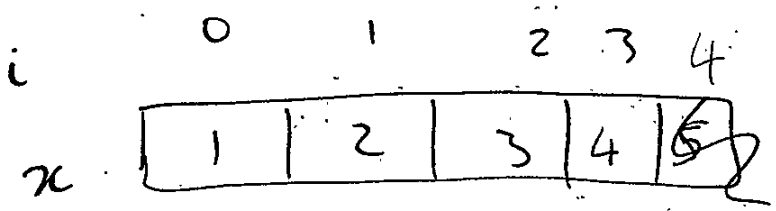

© OCR 2018

(d)* Modern encryption is much stronger than the method described in the first part of this question.

Discuss the impact of modern encryption on society. You should refer to:

- The importance of asymmetric encryption and how it differs from symmetric encryption.
- Different circumstances in which symmetric and asymmetric encryption may be used.

Asymetric encryption uses a private key to encrypt the data. This means the encryption algorithm is not available to the public. for Symetric encryption, there is a public key applied. for example, a string may be encrypted using a private key. If someone gained access to the string, they would not be able to understand it as they do not have the private key to decrypt it.

Circumstances where this may be used could be on bank transfers involving large companies. A private key will be used here to encrypt and decrypt the transfer at both ends so ~~the~~ even if a hacker gained access to the ~~str~~ transfer using for example a man in the middle attack, they still would not be able to understand the information. [9]

© OCR 2018

9 (a) Demonstrate how the bytes below are added together. Show your working.

01101010
00111111+
10101001

10101001

[2]

(b) Demonstrate how the bottom byte below is subtracted from the top byte. Show your working.

11001111
00111001 -
10010110

10010110

[2]

(c) Convert the binary number shown below to hexadecimal.

00110111 00001111

55+15=70

Hex = 46

[2]

(d) The number below is represented in floating point format with a 5-bit mantissa in two's complement followed by a 3-bit exponent in two's complement. Calculate the denary value of the number, showing your working.

01001 010

010.01

4 2 1 ½ ¼

2.25

[3]

© OCR 2018

(e) The numbers below are represented in floating point format with a 5-bit mantissa in two's complement followed by a 4-bit exponent in two's complement. Normalise the numbers shown below, showing your working.

0011 0010

= 3/4

[2]

11100 0110

= - number.

[2]

(f) Show the byte below after having an AND applied with the masking byte.

Byte	1	0	1	1	1	0	0	1
AND	1	1	1	1	1	1	1	1
Result	1	0	1	1	1	0	0	1

[1]

(g) Show the byte below after having an OR applied with the masking byte.

Byte	1	0	1	1	1	0	0	1
OR	1	1	1	1	1	1	1	1
Result	1	1	0	0	0	1	1	0

[1]

© OCR 2018

98
0
58.8
4

98
140

10 **(a)** Draw a logic gate diagram to represent the Boolean expression

$Q \equiv \neg A \vee B$

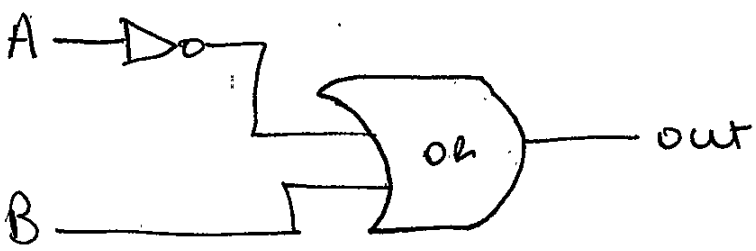

[2]

(b) Find the Boolean expression represented in the Karnaugh Map below. Show your working.

CD \ AB	00	01	11	10
00	1	1	1	1
01	0	0	1	1
11	0	0	0	1
10	0	0	0	1

~~$\neg(C \wedge D)$~~

$\neg(C \vee D)$

$(\neg B \wedge A)$

$(A \wedge \neg C)$

$\neg(C \vee D) \wedge (\neg B \wedge A) \wedge (A \wedge \neg C)$

[5]

END OF QUESTION PAPER

OCR
Oxford Cambridge and RSA

Copyright Information

OCR is committed to seeking permission to reproduce all third-party content that it uses in its assessment materials. OCR has attempted to identify and contact all copyright holders whose work is used in this paper. To avoid the issue of disclosure of answer-related information to candidates, all copyright acknowledgements are reproduced in the OCR Copyright Acknowledgements Booklet. This is produced for each series of examinations and is freely available to download from our public website (www.ocr.org.uk) after the live examination series.

If OCR has unwittingly failed to correctly acknowledge or clear any third-party content in this assessment material, OCR will be happy to correct its mistake at the earliest possible opportunity.

For queries or further information please contact the Copyright Team, First Floor, 9 Hills Road, Cambridge CB2 1GE.

OCR is part of the Cambridge Assessment Group; Cambridge Assessment is the brand name of University of Cambridge Local Examinations Syndicate (UCLES), which is itself a department of the University of Cambridge.

© OCR 2018

Unit code	H	4	4	6	/	0	1

Write here how many booklets you have used in total	1

4 PAGE CONTINUATION BOOKLET

Write the information required clearly in the boxes above using capital letters.

Question	Part	

8	c	procedure shiftRow {
		i=0
		for i=0 to i=4
		if(1 <= i <= 4){
		grid[i] = grid[i-1] }
		if(i=0){
		grid[i] = grid[4] }
		next i
		end procedure }

CONTINUATION BOOKLET
© OCR
DC (SLM) 118454

OCR4

* 042186477701 *

Question	Part	

© OCR

Question	Part	

© OCR

Question	Part	

© OCR